**STEERING, WHEEL - Z26S4D92AN/AH/BN/BH (C750957)**

**2026 RZR - RZR PRO S4 ULTIMATE (R01) - Z26S4D92AN/AH/BN/BH**

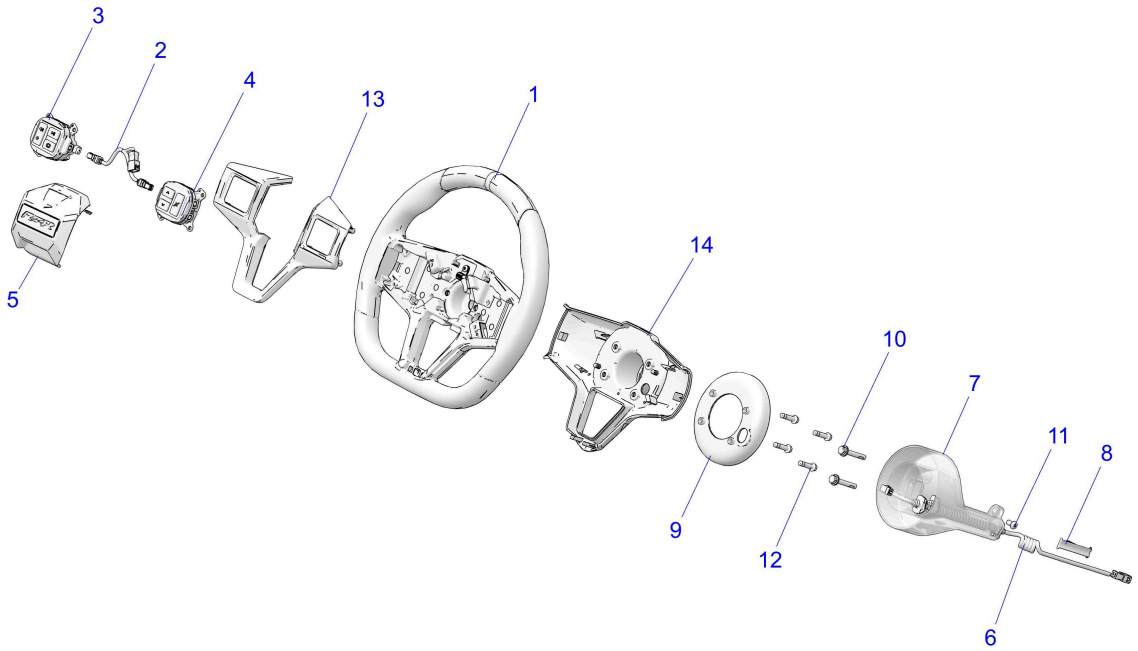


© 2025 Polaris Industries Inc.

C750957

| *Reference #* | *Part#* | *Description* | *Quantity* |
|---|---|---|---|
| | ------- | SCR-M4x15,GSK [NOT SHOWN-7528469] | 7 |
| 1 | 1824823 | WHEEL-STEERING,13" | 1 |
| 2 | 2414689 | HARNESS-STEERING WHEEL | 1 |
| 3 | 4081086 | SWITCH-ASSY,SWC,250K,LH | 1 |
| 4 | 4081087 | SWITCH-ASSY,SWC,250K,RH | 1 |
| 5 | 5456146-070 | CAP-STEERING WHEEL,BASE,BLK | 1 |
| 6 | 2414807 | ASM-COIL,CORD,DRUM [INCL. 7 & 8] | 1 |
| 7 | 5455733 | GUIDE-COLUMN HARNESS | 1 |
| 8 | 7082493 | CLIP-WELD STUD,5MM,TAPE-ON | 1 |
| 9 | 5455734 | COVER-COLUMN HARNESS | 1 |
| 10 | 7518470 | BOLT-M6X1.0X40 HXHD,FLG,W/PATC | 2 |
| 11 | 7519063 | SCREW-TXBH-M6X1.0X12 8.8 ZPB D20 | 1 |
| 12 | 7519297 | SCREW-HXFLG,M6X1.0X25,10.9 | 4 |
| 13 | 1830455 | WHEEL-STEERING,FRT BEZEL | 1 |
| 14 | 1830456 | WHEEL-STEERING,REAR BEZEL | 1 |

Copyright 1996-2026 Polaris Industries U.S.A All rights reserved.